MasterSheet

053 0070
Revision 11/01/16

1993-'98 Toyota T100 Pickup

Complete Car Audio Installation Instructions

CRUTCHFIELD®

IMPORTANT

Before starting, compare items on your invoice with items received. Carefully check through packaging material. If any item is missing, please call ***Crutchfield Technical Support*** *at* ***1-800-955-9094****.*

Although reasonable attempts are made to verify the accuracy of the information contained in this MasterSheet, it is presented without warranties or guarantees of any type due to the constantly changing nature of this type of information and running changes in vehicle production. Any person or entity using this information does so at his or its own risk. If you find our instructions are different from your vehicle, or if you have questions, do not continue with your installation. Contact our toll-free technical support for assistance.

0000530070

Inside...

Page									
2	Factory Radio Removal	✔		✔					
3	Antenna Replacement			✔	✔		✔	✔	
4	Receiver Installation	✔							
5	Door Speakers (If Factory-Equipped)	✔		✔					
6-7	Door Speakers (If Not Factory-Equipped)	✔	✔	✔					✔
8-9	Rear Speakers (Extended Cab)	✔	✔	✔	✔	✔			

Tools Required ▶

Phillips Screwdriver	Flat Blade Screwdriver	Panel Tool	10mm	15mm	Needle-Nose Pliers	Adjustable Wrench	Shop Rag (If equipped with manual windows)
			Socket, Ratchet & Extension				

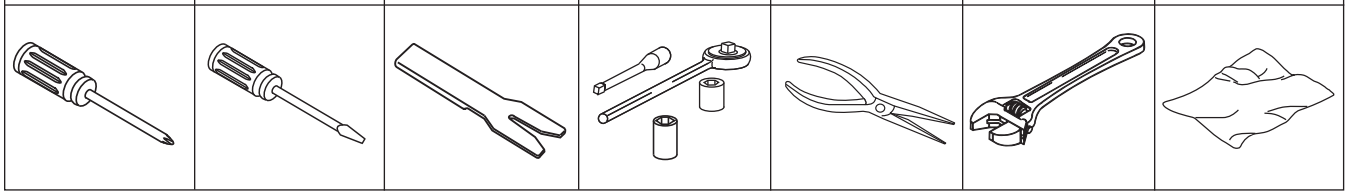

CRUTCHFIELD®

Copyright 2016 Crutchfield Corporation

Factory Radio Removal

1. Set parking brake and disconnect negative battery cable to prevent any electrical short.

2. Open **cup holder**. Pry edges of **receiver trimpanel** to release retaining clips and remove trim panel.

3. Remove four (4) phillips screws securing **factory radio/pocket assembly** to dash. ***Note:*** Some vehicles may not have pockets. Pull out radio, disconnect and remove.

4. Remove four (4) phillips screws securing radio to **side brackets**. Remove radio. ***Note:*** Side brackets will be reused during installation of replacement receiver.

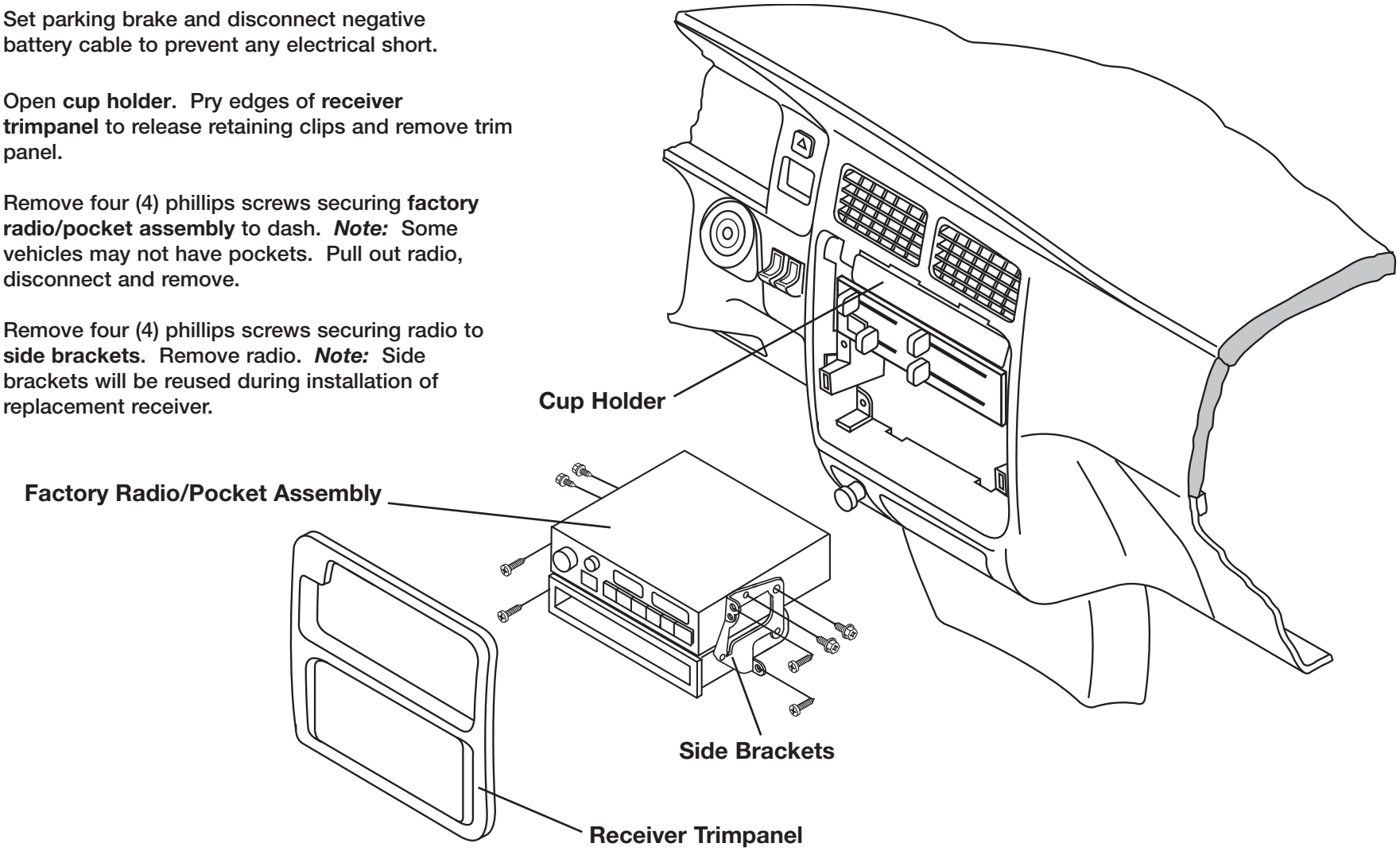

CRUTCHFIELD®
Copyright 2016 Crutchfield Corporation

Antenna Replacement

Antenna replacement is only necessary if existing antenna is damaged or inoperable.

1. Remove radio by following dash disassembly instructions on the previous page.
2. Remove **antenna mast** with an adjustable wrench (Figure 1).
3. Remove **retaining nut** using needle-nose pliers (Figure 1).
4. Pry out four (4) retaining clips from **wheel splash** (Figure 2).
5. Fold back wheel splash.
6. Remove one (1) 10mm bolt from antenna mounting bracket.
7. Remove antenna from fender by pulling out from the bottom.
8. Secure replacement antenna to fender as shown (Figure 1).
9. Route antenna lead to radio location.
10. Plug antenna lead into receiver and test operation.
11. Reinstall wheel splash.

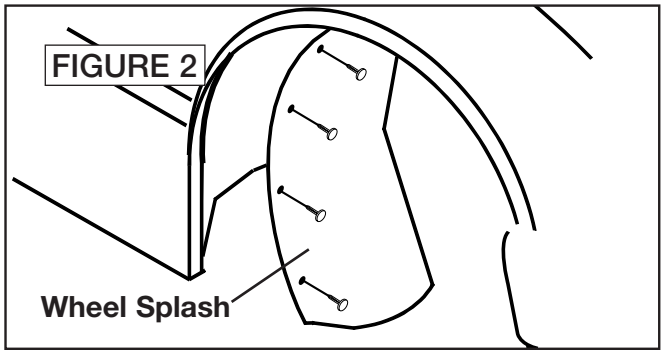

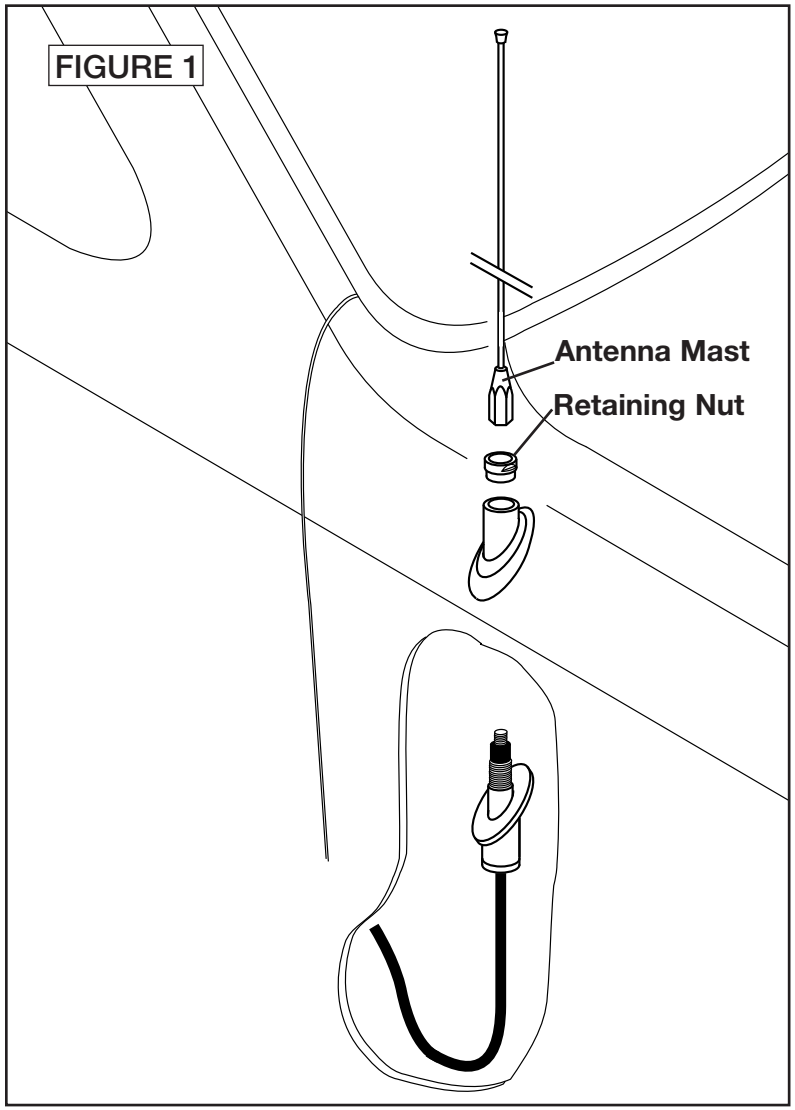

CRUTCHFIELD®
Copyright 2016 Crutchfield Corporation

053 0070

Receiver Installation

NOTES:

Please read first

- *Check to make sure the Crutchfield receiver wiring adaptor plugs into the vehicle receiver harness. If the Crutchfield adaptor is incorrect, please call our* ***Technical Support Department*** *at* ***1-800-955-9094****.*

A Standard DIN receiver is shown. If factory pocket is not present, one is available from Crutchfield. The part number is 003UPT900.

A Double-DIN receiver may also be installed following these same steps, but it will not use a pocket.

The factory subwoofer will be inoperable when factory radio is removed.

1. Align **mounting holes** on aftermarket receiver with holes in **factory side brackets** (Inset). Secure receiver in the same manner as factory radio using screws supplied with new receiver.
2. Make wiring connections following instructions supplied with the receiver wiring adaptor received from Crutchfield.
3. Hold **receiver assembly** near dash. Connect receiver wiring adaptor to vehicle harness. Plug antenna lead into rear of receiver.
4. Secure receiver assembly to dash using screws removed during disassembly.
5. Reassemble dash by reversing disassembly steps.

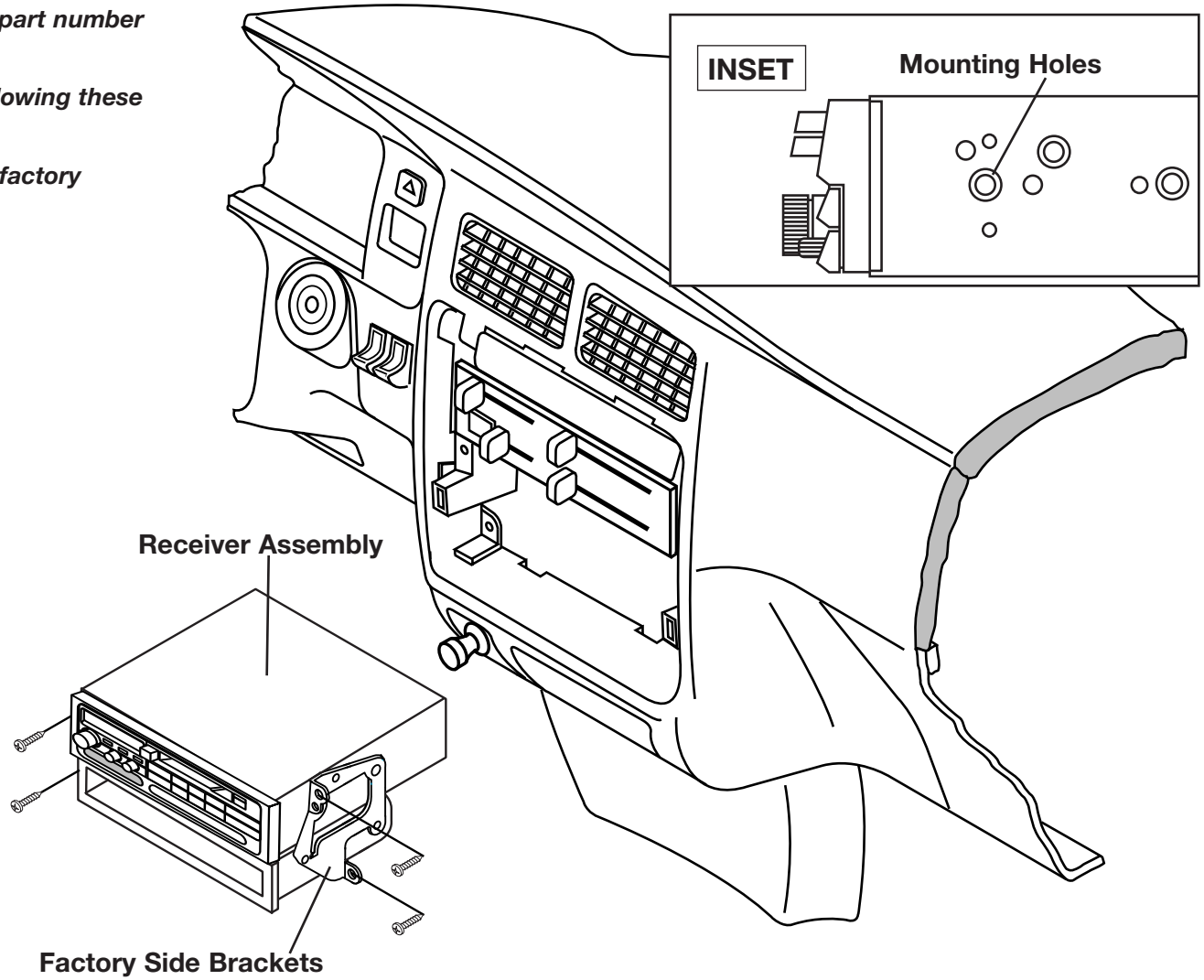

Copyright 2016 Crutchfield Corporation

Door Speakers -- If Factory-Equipped

NOTES:

Please read first

- *Instructions show factory size speakers or speakers with adaptor brackets only. Cutting or fabrication (not shown) will be required for other speaker sizes.*

1. From the rear edge, pry off **speaker grille** with a panel tool.
2. Remove four (4) phillips screws securing speaker. Pull out speaker, disconnect and remove.
3. Connect speaker wiring adaptor of replacement speaker to vehicle speaker harness.
4. Secure speaker to location with screws previously removed.
5. Test speaker operation and reinstall speaker grille.

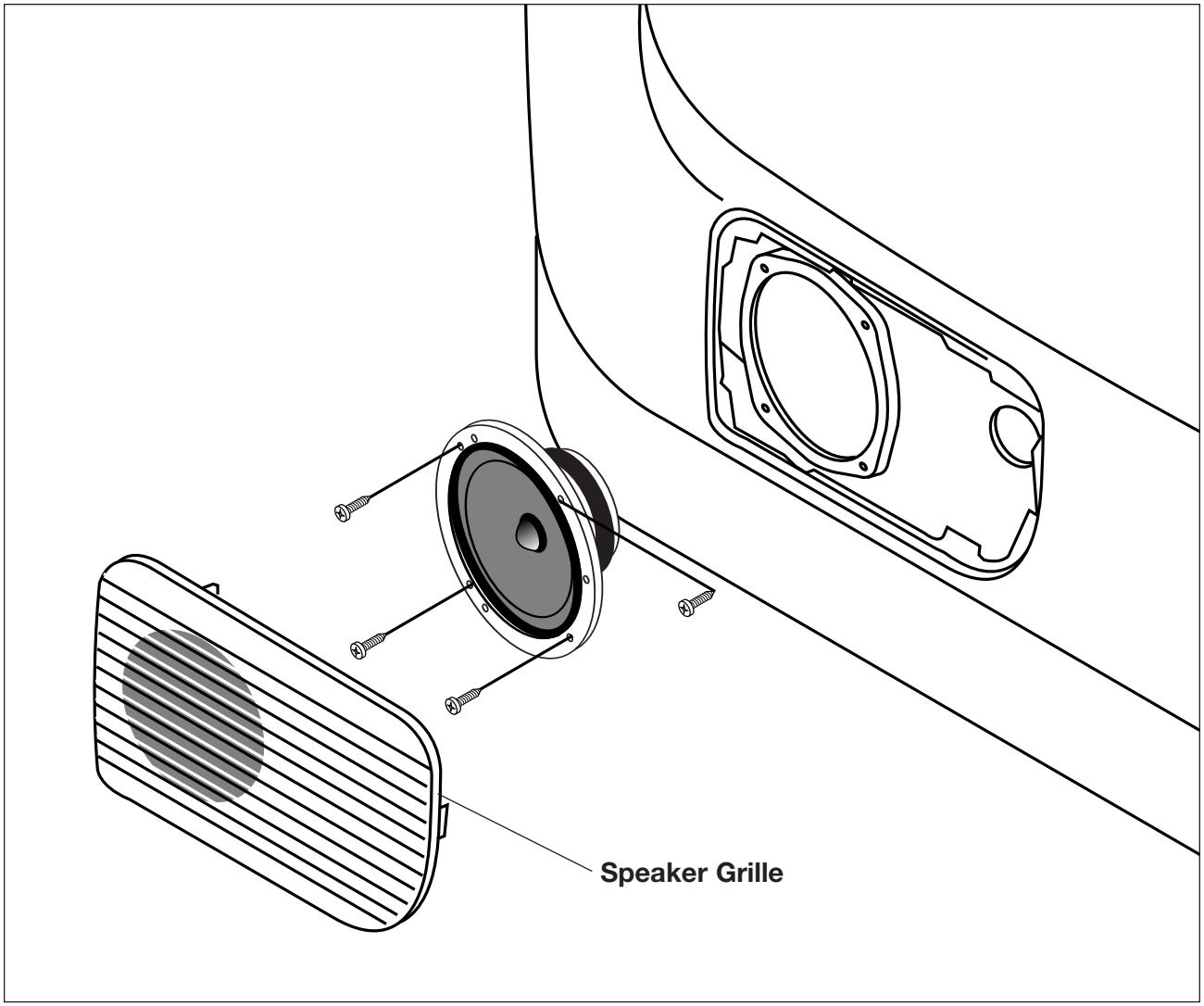

SAFETY CHECK

- *Check that wires do not interfere with window operation.*
- *Test door lock and release operation.*

1-800-955-9094
TECHNICAL SUPPORT

CRUTCHFIELD®

Copyright 2016 Crutchfield Corporation

053 0070

Door Speakers -- If not Factory-Equipped

NOTES:

Please read first

- *Instructions show factory size speakers or speakers with adaptor brackets only. Cutting or fabrication (not shown) will be required for other speaker sizes.*

1. Pry out two (2) **screw covers** and remove phillips screws in upper front area of door panel.
2. Remove one (1) phillips screw from **door release trim** and remove trim.
3. Remove one (1) phillips screw from **door pull cup.**
4. Press in center pins of three (3) retaining clips at bottom of door panel and remove clips (Figure 1).
5. ***If equipped with manual windows:***
   Use a shop rag with a "shoeshine" motion to release **"C" clip** on rear of crank and remove crank (Figure 2).

Continued on the next page.

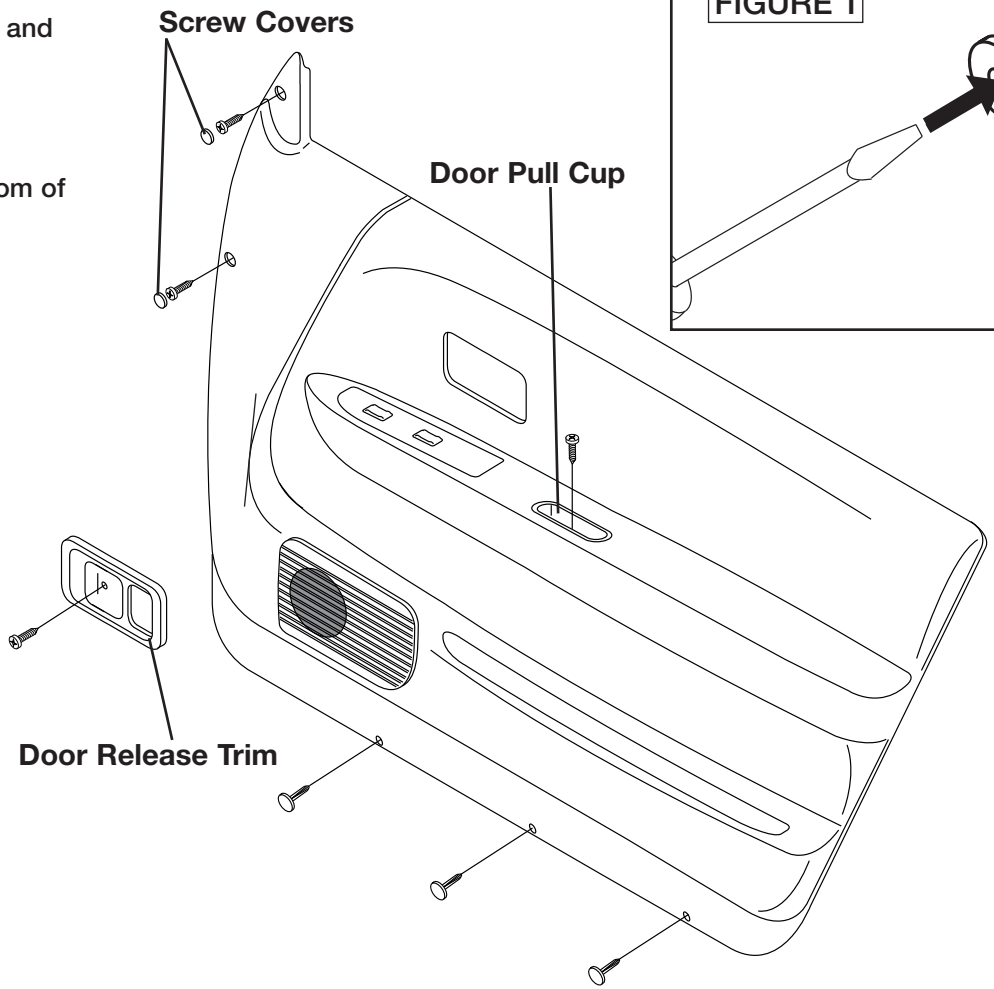

FIGURE 1

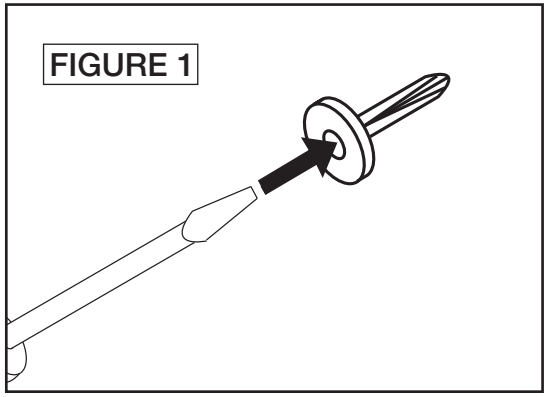

FIGURE 2

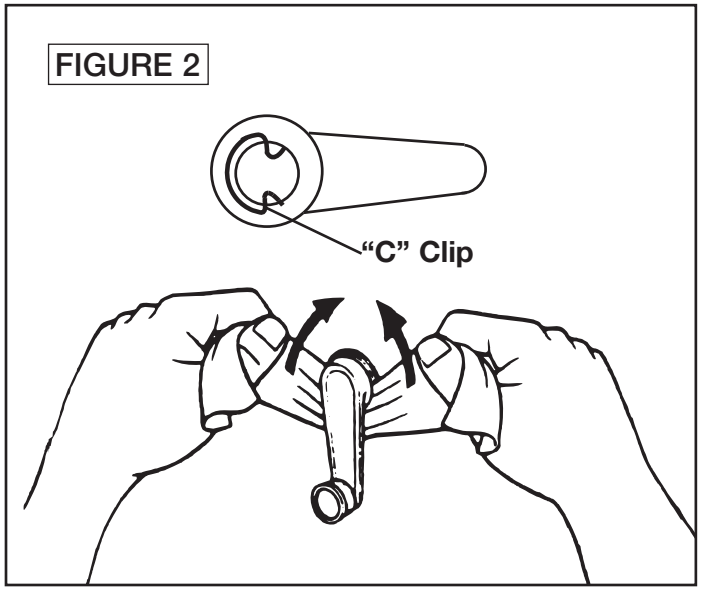

Copyright 2016 Crutchfield Corporation

Door Speakers -- If not Factory-Equipped (continued)

6. Pry around edges of door panel to release retaining clips. Lift panel, disconnect wiring harnesses (if equipped with power options) and remove door panel.

7. Secure new speaker to speaker adaptor bracket.

8. Secure **speaker/bracket assembly** to door as shown (Figure 3).

9. Connect speaker wiring adaptor of replacement speaker to vehicle speaker harness.

10. Test speaker operation and reinstall door panel by reversing removal steps.

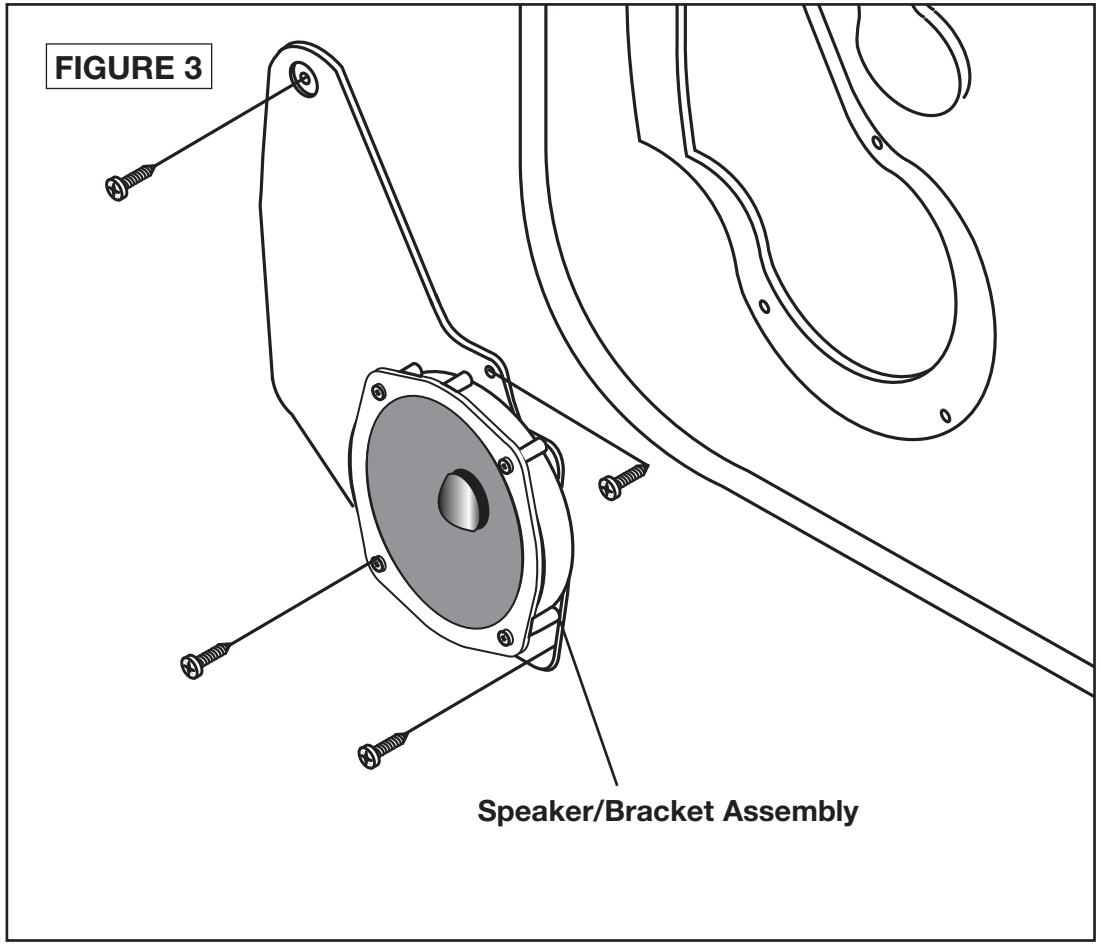

SAFETY CHECK

- *Check that wires do not interfere with window operation.*
- *Test door lock and release operation.*

1-800-955-9094
TECHNICAL SUPPORT

CRUTCHFIELD®

Copyright 2016 Crutchfield Corporation

053 0070

Rear Speakers -- Extended Cab

NOTES:

Please read first

- *Instructions show factory size speakers or speakers with adaptor brackets only. Cutting or fabrication (not shown) will be required for other speaker sizes.*

1. Pry open **seat belt hanger covers.** Remove one (1) 15mm bolt from each hanger (Figure 1).
2. Open rear side window. Pry off **screw cover** over rear side **window latch.** Remove two (2) phillips screws securing latch and fold latch outward (Figure 2).
3. Remove two (2) phillips screws securing **grab handle** and remove handle (Figure 3).
4. Remove three (3) phillips screws from door **scuff plate** and remove plate (Figure 4).
5. Pry off **trim strip** under rear window with a panel tool (Figure 5).
6. Remove three (3) 10mm bolts securing top of rear **seat back.** Slide seat back upward to remove (Figure 5).

Continued on the next page.

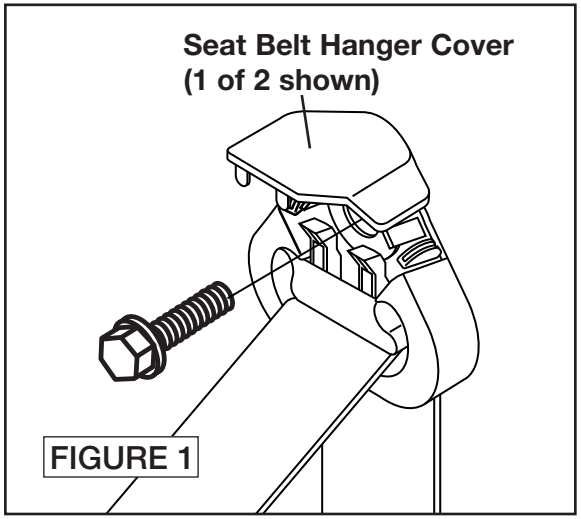

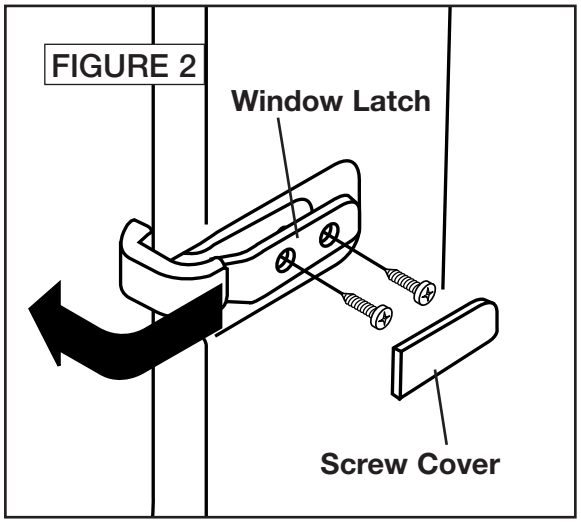

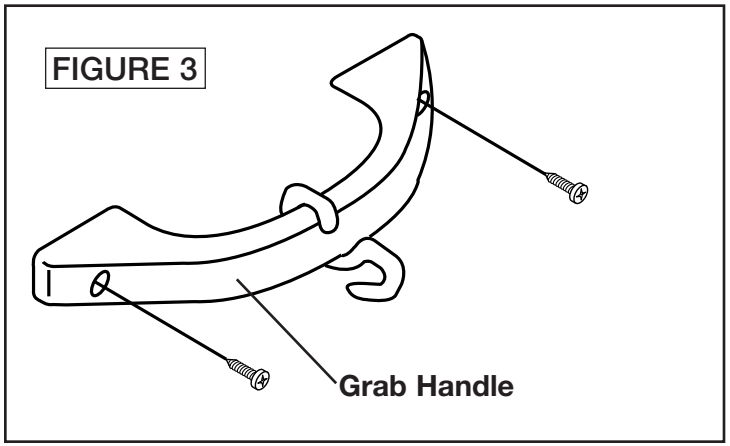

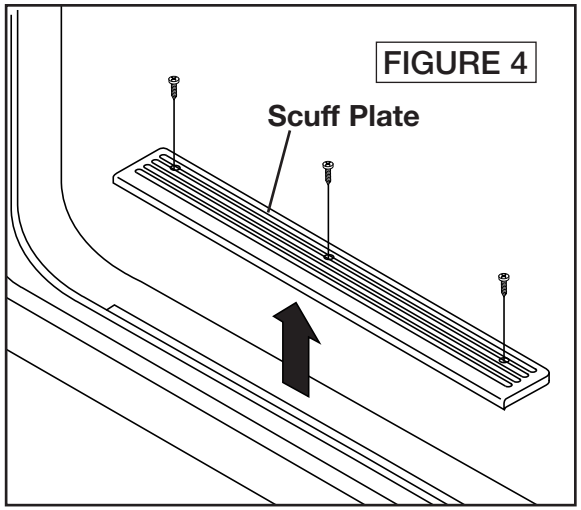

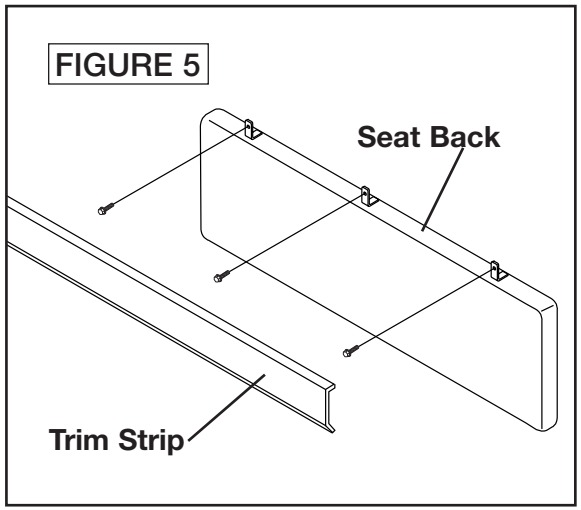

Copyright 2016 Crutchfield Corporation

Rear Speakers -- Extended Cab (continued)

7. Pry out one (1) retaining clip at bottom (near corner) of **rear side panel**. Pry around edges of side panel to remove (Figure 6). ***Note:*** Seat belts remain in panel.

8. Remove four (4) phillips screws securing speaker to **enclosure** (Figure 7). Pull out speaker, disconnect and remove.

9. Connect speaker wiring adaptor of replacement speaker to vehicle speaker harness. Secure speaker to enclosure with screws previously removed.

10. Test speaker operation and reassemble rear of vehicle by reversing removal steps.

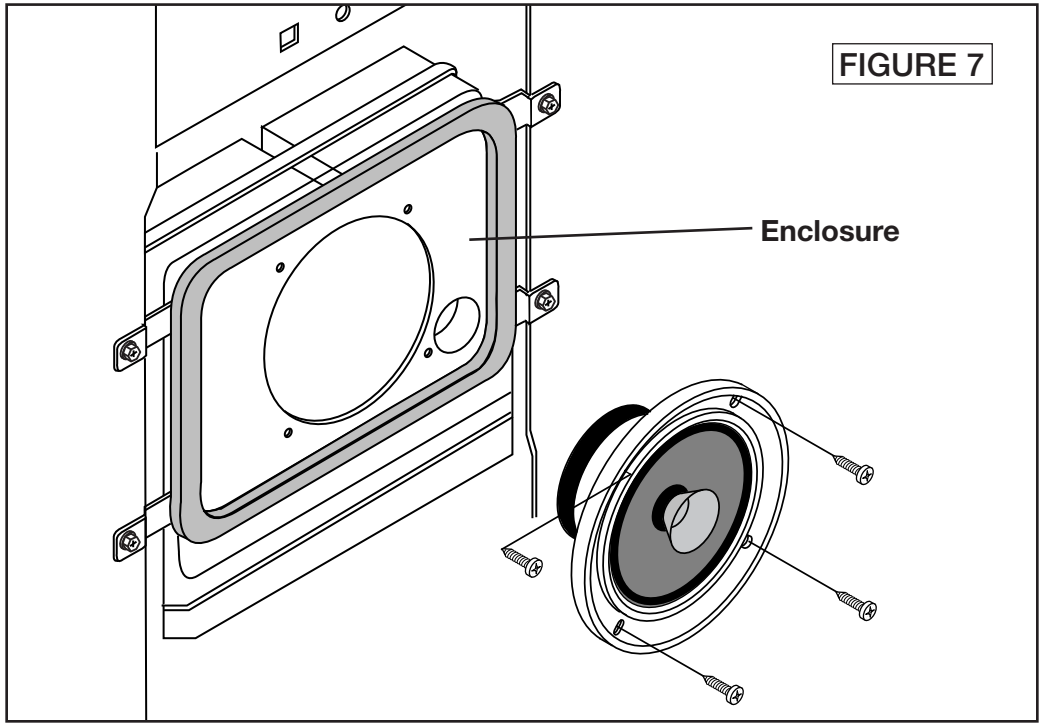

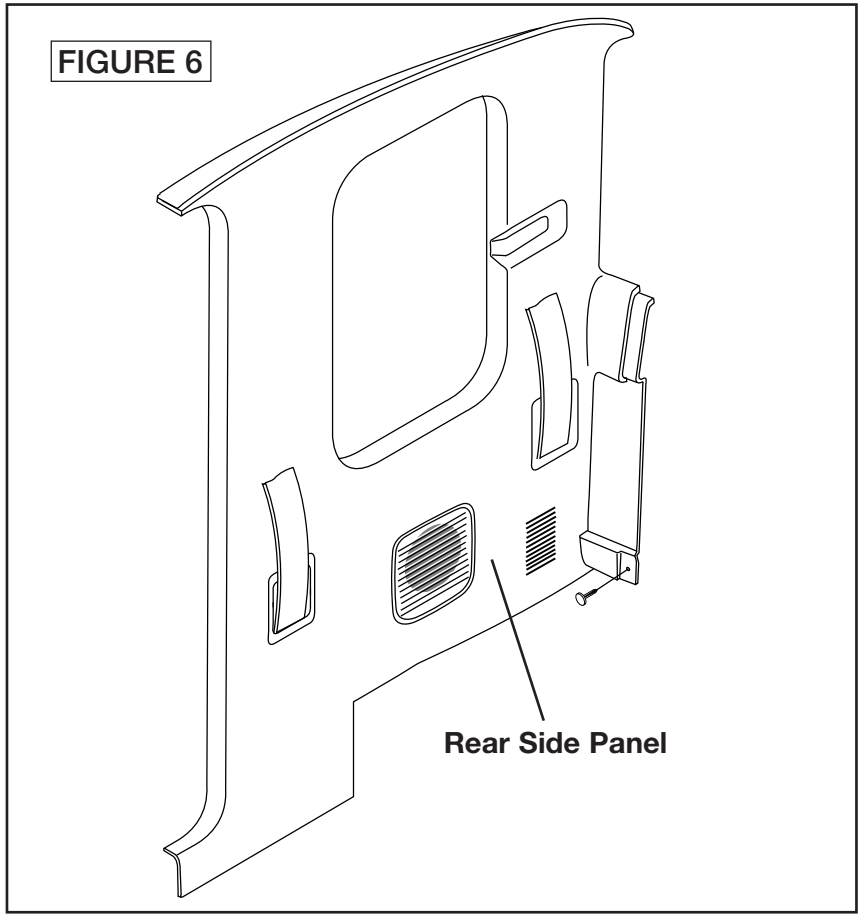

SAFETY CHECK

- *Make sure seats and seat belts are secured to manufacturer's specifications.*

CRUTCHFIELD®
Copyright 2016 Crutchfield Corporation